Minor Project Synopsis Report

Smart Carbontrack- Digitally Monitoring and Reduction of Carbon Footprint for Manufacturing Unit

Project Category: Industry Based

*Projexa Team Id- **26E2022 - J_Coders***

Submitted in partial fulfilment of the requirement of the degree of

BACHELOR OF TECHNOLOGY

in

CSE with Specialization AI & ML (Section -A)

To

K.R Mangalam University

By

Priya Shukla (2401730141)

Sarah Henry (2401730046)

Neha Kumari Singh (2401730136)

Khushboo (2401730080)

Priya Bora (2401730119)

Ridhima Singh (2401730133)

Under the supervision of

Dr. Shahjad

Department of Computer Science and EngineeringSchool of Engineering and Technology

K.R Mangalam University, Gurugram- 122001, India

Feb 2026

INDEX

S. No.	Headings	Page No.
1.	Abstract	03
2.	Introduction (description of broad topic)	04
3.	Motivation	05
4.	Literature Review	06 - 08
5.	Gap Analysis	09
6.	Problem Statement	10
7.	Objectives	11
8.	Tools/platform Used	12
9.	Methodology	13 - 14
10.	References	15

ABSTRACT

Climate change mitigation has emerged as a critical priority for governments, industries, and organizations worldwide. Accurate measurement and management of greenhouse gas (GHG) emissions is the foundation for achieving sustainability goals, regulatory compliance, and long-term environmental responsibility. *However, many organizations still rely on fragmented, manual, and error-prone methods for carbon accounting, making it difficult to establish reliable baselines and track emission reductions over time*.

Smart CarbonTrack is a digital carbon monitoring and analytics platform designed to automate the measurement, normalization, and analysis of carbon emissions across *Scope 1, Scope 2, and Scope 3 categories*. The system captures raw plant-level operational inputs such as fuel consumption, electricity usage, and production output, validates and normalizes the data, and applies standardized emission factors to calculate carbon emissions accurately. A key feature of Smart CarbonTrack is its baseline creation mechanism, which establishes a consistent reference point for comparing future emissions and evaluating reduction performance.

By generating real-time dashboards, KPI cards, and emission analytics, Smart CarbonTrack enables organizations to monitor carbon performance, identify inefficiencies, and support sustainability reporting and decision-making. Although the platform does not directly issue carbon credits, it acts as a foundational system for carbon accounting, MRV (Monitoring, Reporting, and Verification), and future carbon credit readiness.

KEYWORDS: Carbon Accounting, Scope 1–2–3 Emissions, Baseline Creation, Sustainability Analytics, Carbon Intensity, Digital Monitoring

1. INTRODUCTION

The rapid growth of industrialization, energy consumption, and global supply chains has significantly increased greenhouse gas emissions, intensifying the effects of climate change. As a result, organizations across all sectors are now expected to quantify their environmental impact and actively participate in emission reduction efforts. International frameworks such as the **GHG Protocol** and **ISO 14064** emphasize the importance of structured carbon accounting and transparent reporting.

Carbon emissions are broadly classified into three categories:

- **Scope 1:** Direct emissions from owned or controlled sources (e.g., fuel combustion, generators, company vehicles)
- **Scope 2:** Indirect emissions from purchased electricity, steam, or heat
- **Scope 3:** Indirect value-chain emissions (e.g., transportation, raw materials, logistics, and supplier activities)

Among these, Scope 3 emissions are often the most complex and largest contributor, making accurate tracking especially challenging. Traditional methods such as spreadsheets and manual reporting fail to capture this complexity, leading to inconsistent data, delayed reporting, and compliance risks.

To address these challenges, sustainability management software platforms have emerged as essential tools for modern organizations. These platforms emphasize automation, standardization, and analytics to support emission tracking and ESG reporting. However, many existing solutions are either costly, overly complex, or lack transparency in baseline creation and KPI derivation.

Smart CarbonTrack is developed to bridge this gap by offering a structured, transparent, and scalable digital solution for carbon emission monitoring. The platform focuses on plant-level and operational data, enabling organizations to convert raw inputs into meaningful carbon insights. By incorporating baseline creation and carbon intensity metrics, Smart CarbonTrack allows organizations not only to measure emissions but also to track performance improvements over time.

2. MOTIVATION

The motivation behind developing Smart CarbonTrack arises from the growing global concern over climate change and the increasing need to reduce greenhouse gas emissions. Organizations across industries and governments are committing to sustainability goals such as carbon neutrality and net-zero emissions, which require accurate measurement and continuous monitoring of carbon emissions.

With the adoption of international standards such as the (GreenHouse Gases) *GHG Protocol and (Environmental, Social, and Governance*) *ESG reporting frameworks*, organizations are now required to quantify emissions across Scope 1, Scope 2, and Scope 3. This has increased the demand for structured carbon accounting systems capable of managing diverse operational data and complex emission calculations.

Another important motivation is the need for *baseline creation* in carbon management. A baseline provides a reference point for tracking emission performance over time and evaluating the impact of sustainability initiatives. Smart CarbonTrack focuses on baseline establishment using normalized production data to ensure consistent and meaningful comparisons.

The project is further motivated by the growing use of *digital sustainability management platforms* in industry, which highlight the role of technology in automating data collection, standardizing calculations, and improving transparency. Smart CarbonTrack draws inspiration from these platforms to implement similar concepts in an academic and practical setting.

Finally, Smart CarbonTrack is motivated by the need to convert *raw operational data into actionable insights*. By generating dashboards, KPIs, and carbon intensity metrics, the platform supports informed decision-making and long-term sustainability planning, contributing to more responsible and efficient industrial practices.

3. LITERATURE REVIEW

Carbon credit mechanisms form a crucial component of corporate climate strategies by enabling the quantification and compensation of greenhouse gas emissions that cannot be directly eliminated through internal reductions. The lifecycle of a carbon credit begins with the design and development of a carbon removal project, in which developers plan how to sequester or reduce carbon dioxide and estimate net impact through life cycle assessments. These projects undergo independent validation and verification before credits are issued and registered with recognized registries, ensuring credibility and transparency throughout the process. Once issued, carbon credits can be bought by organizations wishing to offset their residual emissions; however, they only contribute to climate goals after they are formally retired, meaning the credit is permanently removed from circulation so it cannot be claimed again. Effective tracking, monitoring, and retirement are essential to uphold the integrity of carbon credits as tools for emissions mitigation, underscoring the importance of rigorous lifecycle management in voluntary carbon markets. *(The Carbon Credit Lifecycle explained* Carbon Direct, *no date).*

Environmental, Social, and Governance (ESG) criteria provide a structured framework for assessing an organization's sustainability and ethical impact. Kumar (2024) explains that the environmental aspect of ESG focuses on managing carbon emissions, resource usage, and environmental risks, while also promoting transparency and accountability through standardized reporting. ESG adoption helps organizations align business strategies with sustainability goals and supports data-driven decision-making for improved environmental performance, making it highly relevant for digital carbon monitoring systems like Smart CarbonTrack. *(Kumar, 2024).*

Stedman (2024) reviews leading sustainability management software solutions, highlighting how these platforms enable organizations to monitor, report, and improve environmental performance through integrated data analytics, KPI tracking, and real-time dashboards. The analysis underscores the importance of digital systems that unify disparate operational data, support regulatory compliance, and facilitate strategic decision-making across environmental, social, and governance dimensions. Such tools help businesses identify emission hotspots, benchmark performance, and implement targeted sustainability actions, demonstrating the practical value of software-driven emission management. This underscores the need for solutions like Smart CarbonTrack that combine automated monitoring with insightful analytics to support ongoing carbon reduction efforts. *(Stedman, 2024).*

Esg (2026) evaluates the leading carbon accounting software platforms available in 2026, emphasizing key features that support accurate greenhouse gas tracking, automated data integration, and compliance with ESG reporting standards. The review highlights how advanced tools offer capabilities such as real-time emission calculation, customizable dashboards, and streamlined reporting workflows that help organizations monitor carbon performance effectively. By comparing multiple solutions across usability, analytics, and scalability, the article illustrates the growing importance of digital carbon accounting tools in sustainability

management, reinforcing the relevance of systems like Smart CarbonTrack that aim to combine accessibility with comprehensive emission analytics. *(Esg, 2026).*

Kulakova and Muravyova (2023) explore automated carbon footprint monitoring architectures within smart city environments, emphasizing the integration of sensor networks, data transmission frameworks, and analytical modules to continuously capture and estimate greenhouse gas emissions. Their work demonstrates the feasibility of combining IoT devices with centralized processing systems to generate real-time emission estimates and improve sustainability management at scale. The study reinforces the importance of automated data acquisition and processing pipelines—key elements that enable proactive emission tracking and operational optimization—providing valuable insights that inform the development of comprehensive carbon monitoring solutions such as Smart CarbonTrack. *(Kulakova and Muravyova, 2023).*

Table 1: Literature Review Table

Author & Year	**Focus Area**	**Title / Topic**	**Source**	**Key Findings**
GHG Protocol (2015)	Carbon Accounting Frameworks	Corporate Accounting and Reporting Standard	GHG Protocol	Defines Scope 1–3 emissions and standardized methodologies for organizational carbon accounting.
IPCC (2019)	Emission Measurement	Guidelines for National Greenhouse Gas Inventories	IPCC	Provides scientifically validated emission factors and calculation methods for accurate GHG estimation.
Zhang et al. (2021)	Digital Monitoring Systems	Real-time Carbon Tracking in Manufacturing Enterprises	Energy Journal	Real-time monitoring improves energy visibility and reduces operational emission inefficiencies.
Li et al. (2022)	Automated Monitoring Architecture	IoT-based Carbon Footprint Monitoring Systems	IEEE Access	IoT sensors and analytics enable continuous and automated enterprise-level emission tracking.
Industry Surveys (2023)	Analytics & Decision Support	Carbon Management Software Platforms Review	TechTarget	Dashboards, KPIs, and carbon intensity metrics support sustainability decision-making.

4. GAP ANALYSIS

The literature review highlights significant advancements in carbon accounting frameworks, digital monitoring systems, and analytics-based decision support tools. Standards such as the GHG Protocol and IPCC guidelines provide robust methodologies for emission measurement across Scope 1, Scope 2, and Scope 3 categories. Similarly, recent studies demonstrate the effectiveness of digital and IoT-based monitoring systems in improving emission visibility and operational efficiency. However, despite these advancements, several gaps remain:

- *Firstly, many existing carbon accounting frameworks focus primarily on methodological accuracy and compliance but provide limited guidance on practical implementation at the manufacturing unit level. Small and medium-scale industries often lack accessible systems that translate these standards into operational workflows.*
- *Secondly, although digital monitoring systems enable real-time data collection, integration between raw operational data and standardized emission calculation logic is often fragmented. Most solutions either emphasize data capture or reporting but fail to provide an end-to-end automated pipeline from data acquisition to actionable insights.*
- *Thirdly, existing platforms largely emphasize absolute emission values, while offering limited support for normalized metrics such as carbon intensity and baseline comparison. Without proper baseline creation and production-normalized analysis, organizations cannot objectively measure performance improvements over time.*

Furthermore, Scope 3 emissions identified in literature as the largest contributor remain underrepresented due to data complexity and lack of structured tracking mechanisms. Current systems often simplify or exclude Scope 3 emissions, leading to incomplete carbon footprint assessments.

Finally, many commercial carbon management tools are cost-intensive and complex, limiting their adoption in academic projects and smaller manufacturing units. There is a clear need for a transparent, scalable, and academically implementable solution that balances accuracy with usability.

Smart CarbonTrack addresses these gaps by offering a structured digital system that integrates automated data processing, Scope 1–3 emission calculation, baseline creation, and dashboard-driven analytics tailored for manufacturing environments

5. PROBLEM STATEMENT

Manufacturing units contribute significantly to global greenhouse gas emissions; however, many organizations lack a structured and reliable digital system to monitor, analyse, and reduce their carbon footprint. Existing practices often rely on manual data handling, fragmented reporting tools, or periodic assessments that fail to capture real-time operational emissions.

Although established frameworks such as the GHG Protocol and IPCC guidelines define standardized emission calculation methods, their practical application at the plant level remains challenging. The absence of integrated digital platforms results in inaccurate emission estimates, lack of baseline references, and limited visibility into major emission sources.

Additionally, the lack of production-normalized metrics and continuous monitoring restricts an organization's ability to evaluate the effectiveness of emission reduction strategies. Without actionable insights and decision-support mechanisms, sustainability initiatives remain reactive rather than proactive.

Therefore, there is a need for a digital solution that can seamlessly collect operational data, calculate Scope 1–3 emissions, establish baselines, and present actionable insights through intuitive dashboards. Smart CarbonTrack aims to address this need by providing a comprehensive digital platform for effective carbon footprint monitoring and reduction in manufacturing units.

6. OBJECTIVES

The primary objective of the Smart CarbonTrack project is to design and develop a digital platform that enables effective monitoring, analysis, and reduction of carbon emissions in manufacturing units.

The specific objectives are as follows:

- To design and develop a digital platform for continuous monitoring and analysis of carbon emissions in manufacturing units, supporting data-driven sustainability management.
- To calculate greenhouse gas emissions across **Scope 1, Scope 2, and Scope 3** using standardized emission factors and validated operational data.
- To establish a normalized **carbon baseline and carbon intensity metrics** by integrating emission data with production output for consistent performance evaluation.
- To provide interactive dashboards and KPIs that help identify emission hotspots and support informed decision-making for emission reduction strategies.

7. Tools/Technologies Used

Frontend Technologies:

- **Angular**: Angular is used to develop a dynamic and responsive user interface for the Smart CarbonTrack web application. It enables component-based architecture, efficient data binding, and smooth user interactions for dashboards, forms and visualizations.

Backend Technology:

- **Node.js:** used to implement the backend logic of the system. It handles data processing, carbon emission calculations, API development, and communication between the frontend and the database.

Database Management:

- **MongoDB**: used as a NoSQL database to store plant-wise and month-wise operational data. It allows flexible and scalable storage of energy consumption, fuel usage, production output, and emission records.

8.METHODOLOGY

1. Data Collection

- The system collects monthly operational data from manufacturing units on a plant-wise basis.
- The collected data includes electricity consumption, fuel usage, renewable energy utilization and production output.
- This data is entered through a web-based interface to ensure consistency and accuracy.

2. Data Validation and Storage

- The entered data is validated to check for missing, incorrect, or inconsistent values.
- After validation, the data is stored in a structured format, making it suitable for further processing and analysis.

3. Carbon Emission Calculation

Carbon emissions are calculated using standard emission factors. The system evaluates:

- Scope 1 emissions (direct emissions from fuel consumption),
- Scope 2 emissions (indirect emissions from electricity usage),
- Scope 3 emissions (other indirect emissions – future enhancement).

The total emissions are calculated in terms of tonnes of CO_2 equivalent.

4. KPI Generation and analysis

Based on the calculated emissions, the system generates key performance indicators (KPIs) such as:

- Total carbon emissions,
- Carbon intensity (CO_2 emissions per unit of production)
- Total energy consumption,
- Cost impact and potential savings.

These KPIs help in evaluating environmental performance.

5. Dashboard Visualization

All calculated KPIs and emission data are visualized through an interactive dashboard. The dashboard includes graphs, charts, and summary cards to provide real-time insights to management and decision-makers.

6. Reduction Strategy Recommendation

By analysing emission trends, the system identifies high-emission areas. Based on this analysis, suitable carbon reduction strategies such as energy efficiency improvements and increased renewable usage are recommended.

Architectural Diagram

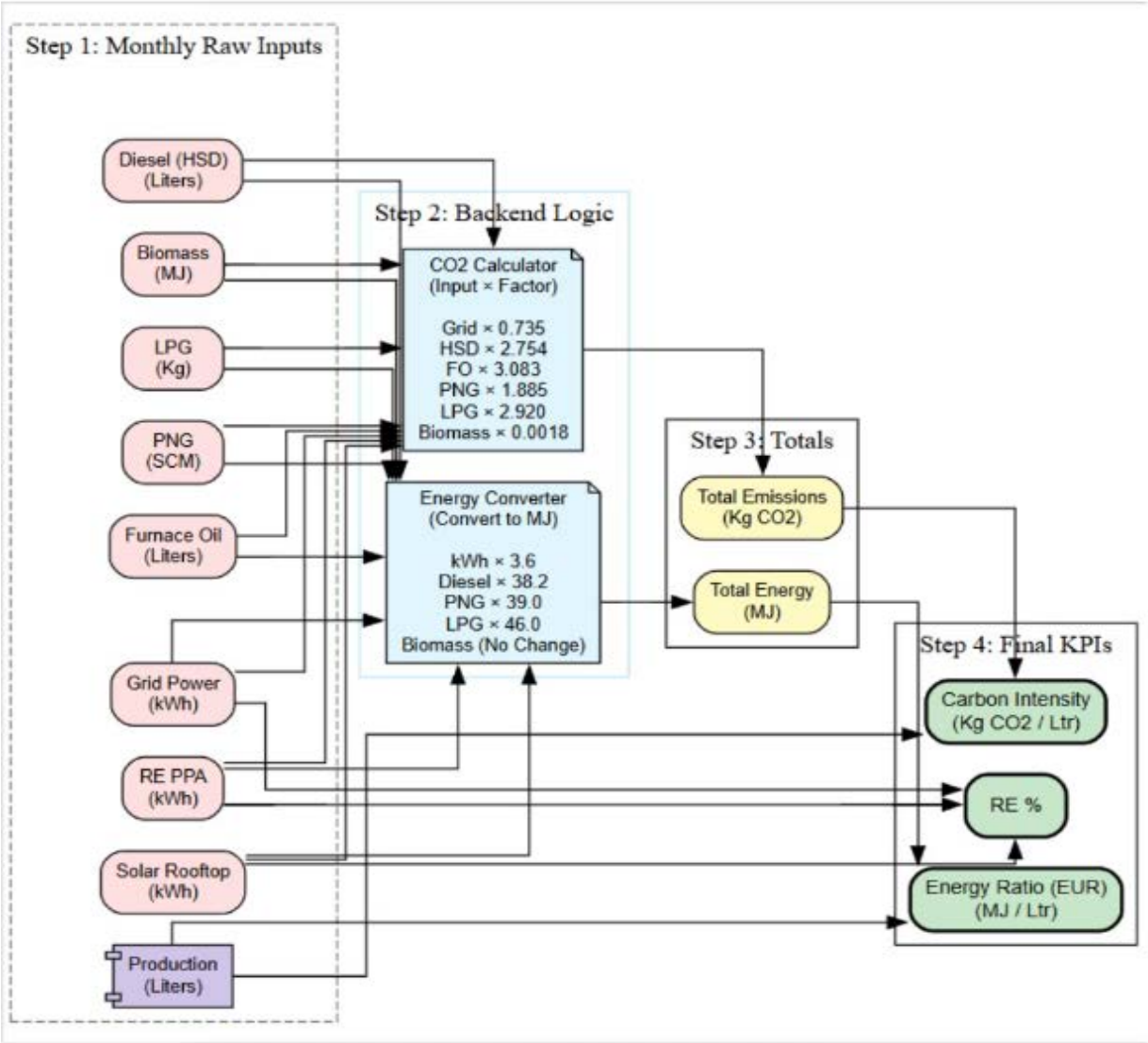

9. REFERENCES

Clark, A.P., Yamamoto, H. and Rodríguez, E. (no date) Carbon reduction pathways for manufacturing enterprises under Digital Monitoring Systems, Journal of Sustainability, Policy, and Practice. Available at: https://schoalrx.com/index.php/jspp/article/view/67 (Accessed: 05 February 2026).

Ekaterina Kulakova and Elena Muravyova (2023) Automated Carbon Footprint Monitoring Systems for a Smart City. Available at: https://www.preprints.org/frontend/manuscript/eb188a69aa4e9b48af8de28a47ceccfd/download_pub(Accessed: 05 February 2026).

Esg, K. (2026) The 15 best carbon accounting software for 2026: Key ESG, The 15 Best Carbon Accounting Software for 2026 | KEY ESG. Available at: https://www.keyesg.com/article/best-carbon-accounting-software-platforms (Accessed: 05 February 2026).

Kumar, A. (2024) ESG explained: A beginner's guide to environmental, social, and governance criteria, EcoActive ESG. Available at: https://ecoactivetech.com/esg-explained-a-beginners-guide-to-environmental-social-and-governance-criteria/ (Accessed: 05 February 2026).

Stedman, C. (2024) 18 sustainability management software providers to consider, Sustainability and ESG. Available at: https://www.techtarget.com/sustainability/feature/Sustainability-management-software-providers-to-consider (Accessed: 05 February 2026).

The Carbon Credit Lifecycle explained (no date) Carbon Direct. Available at: https://www.carbon-direct.com/insights/the-carbon-credit-lifecycle-explained (Accessed: 05 February 2026).

Zghouda, O. (2024) Carbon footprints calculation in the IOT industry: Organization and product, Dipòsit Digital de la Universitat de Barcelona: Home. Available at: https://diposit.ub.edu/items/be2d4772-5419-44ed-8686-6819fd6b21fd (Accessed: 05 February 2026).